SANITATION CERTIFIED LOW PROFILE 7

Ambient (Unheated) Air Curtain

Data Sheet

For Mounting Heights To 7' (insect control)

STANDARD CONSTRUCTION

- EPH Listed per NSF 37
- 8 1/2" high x 8" deep
- 1/5 hp single speed motor(s)
- White or black aluminum exterior cover
  Optional: Custom Color or Stainless)
- Wall & Top Mounting

5 Year Limited Warranty

Made in USA

for outdoor use

FDA RECOMMENDED

USDA COMPLIANCE

Air Curtain Fans for ANSI/NSF37 Customer Entry maximum mounting height is 7'

MODEL	Nozzle Width (in)	Max Vel. at Nozzle (fpm)	Avg. Outlet Vel. (fpm)	Air Volume (cfm)	Outlet Vel. Uniformity	Power Rating (kW)	Motor(s) @ hp	Net Wt. (lbs)
SLC07-1036A	34.62	3,621	1,786	1,020	92%	0.32	1 @ 1/5	35
SLC07-1042A	40.62	3,439	1,773	1,188	93%	0.32	1 @ 1/5	38
SLC07-1048A	46.62	3,274	1,769	1,360	94%	0.32	1 @ 1/5	42
SLC07-1060A	58.13	2,984	1,727	1,656	95%	0.32	1 @ 1/5	49
SLC07-1072A	71.37	2,913	1,725	2,031	95%	0.32	1 @ 1/5	56
SLC07-2084A	83.50	3,439	1,725	2,376	93%	0.64	2 @ 1/5	76
SLC07-2096A	95.50	3,274	1,727	2,720	94%	0.64	2 @ 1/5	84
SLC07-2108A	107.00	3,274	1,709	3,016	94%	0.64	2 @ 1/5	91
SLC07-2120A	118.50	2,984	1,695	3,312	95%	0.64	2 @ 1/5	98

NOTE: Operation at 50 Hz will generate approximately a 17% reduction in air performance.

See sheet EP-300 for amp draws/total load requirements.

MODEL NUMBER CONFIGURATION

SLC07-1 036 A A-SS

Series	# of Motors	Opening Width	Heat	Voltage	Cabinet Finish
SLC07	1, 2	036" - 120"	A=Ambient	*A=120/1/60 B=208/1/60 J=240/1/60 V=220/1/50	White *(leave blank)* BK=Black **Opt. Cabinet Finish** SS=Stainless Steel CC=Custom Color

*Suitable for 50hz

make sure to specify Cabinet Finish if other than white

VELOCITY PROFILE: *Model SLC07-1036A*			
Distance from Nozzle (ft)	2	3	4
Core Velocity (fpm)	1986	1643	1407

Sound level measured 10' (3m) from the unit in free field:
1 & 2 motor(s): 54 dBA & 57 dBA

Berner reserves the right to alter specifications without prior notice.

www.berner.com Berner International 800.245.4455
111 Progress Ave. / New Castle / PA / 16101 / USA

©Copyright, 2017 Berner International

SANITATION CERTIFIED LOW PROFILE 7

Ambient (Unheated) Air Curtain
Electrical Performance Sheet

	120/1/60 (voltage code A) MOTOR AMP DRAW = 3.4 each			208/1/60 (voltage code B) MOTOR AMP DRAW = 1.7 each			240/1/60 (voltage code J) or 220/1/50 (voltage code V) MOTOR AMP DRAW = 1.7 each		
MODEL	# CKTS	AMPS PER CIRCUIT	BREAKER RATING PER CIRCUIT	# CKTS	AMPS PER CIRCUIT	BREAKER RATING PER CIRCUIT	# CKTS	AMPS PER CIRCUIT	BREAKER RATING PER CIRCUIT
SLC07-1036A SLC07-1042A SLC07-1048A SLC07-1060A SLC07-1072A	1	3.4	15	1	1.7	15	1	1.7	15
SLC07-2084A SLC07-2096A SLC07-2108A SLC07-2120A	1	6.8	15	1	3.4	15	1	3.4	15

Berner reserves the right to alter specifications without prior notice.

www.berner.com **Berner International** **800.245.4455**
111 Progress Ave. / New Castle / PA / 16101 / USA

©Copyright, 2017 Berner International

SLC07
AMBIENT SYSTEM
SINGLE SPEED

TOP VIEW

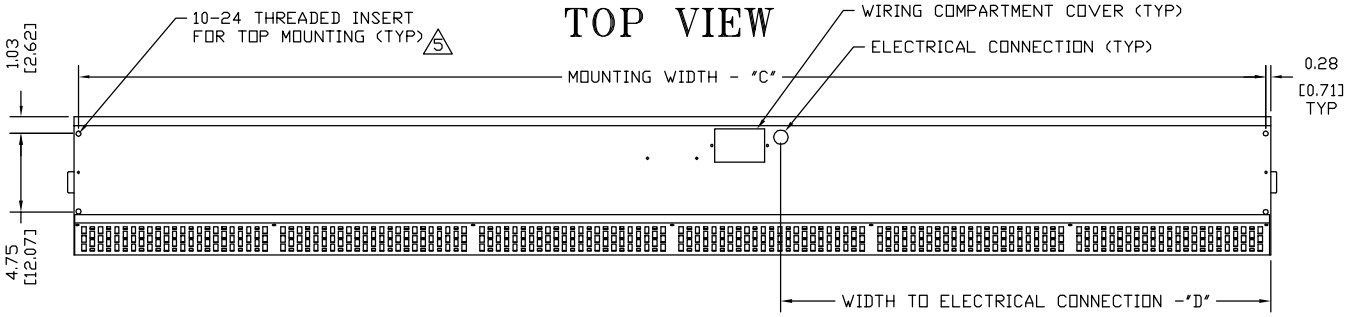

FRONT VIEW

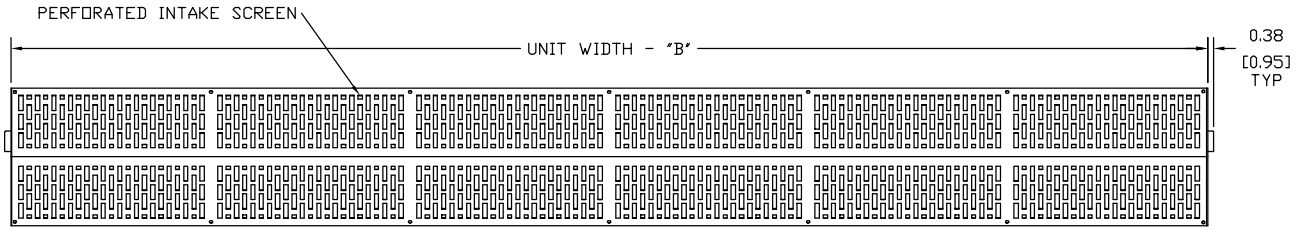

END VIEW

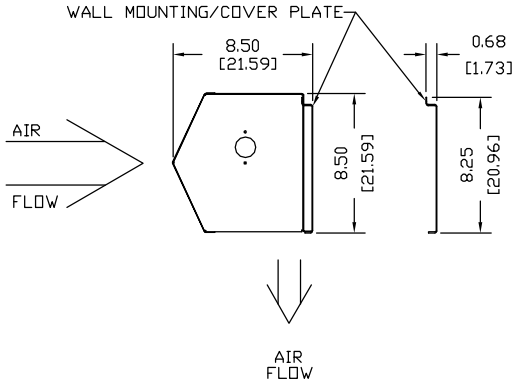

BOTTOM VIEW

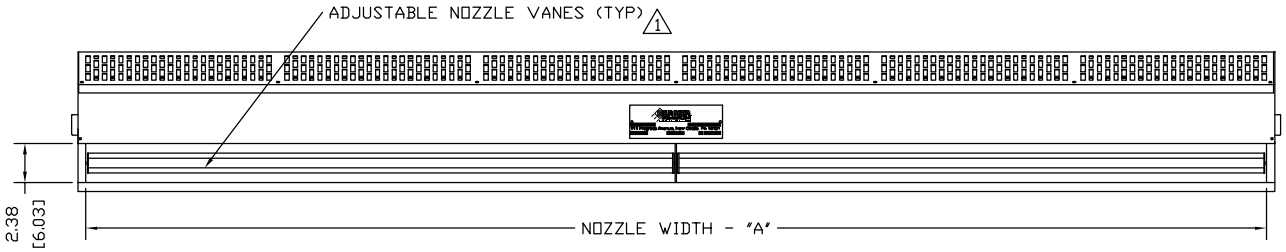

NOTES:

1. AIR CURTAIN MUST BE INSTALLED SO AIR STREAM IS NOT OBSTRUCTED WHEN DEFLECTED 20° TO EITHER SIDE OF ℄.
2. ELECTRICAL CONNECTIONS TO BE FLEXIBLE.
3. FIELD VERIFY DIMENSIONS.
4. ANCHORS TO SUPPORTING STRUCTURE BY OTHERS.
5. ADEQUACY OF SUPPORTING STRUCTURE IS TO BE VERIFIED BY A PROFESSIONAL STRUCTURAL ENGINEER.
6. LETTER "A" IN MODEL NUMBER DESIGNATES AMBIENT UNIT.
7. DIMENSIONS IN INCHES [CENTIMETERS].

MODEL 6	NOZZLE WIDTH "A"	UNIT WIDTH "B"	MOUNTING WIDTH "C"	ELECTRIC WIDTH "D"
SLC07-1036A	34.62 [87.95]	36.06 [91.60]	35.50 [90.17]	11.43 [29.05]
SLC07-1042A	40.62 [103.17]	42.06 [106.83]	41.50 [105.41]	17.06 [43.33]
SLC07-1048A	46.62 [118.41]	48.06 [122.07]	47.50 [120.65]	17.12 [43.50]
SLC07-1060A	58.13 [147.65]	59.55 [151.26]	59.00 [149.86]	23.18 [58.88]
SLC07-1072A	71.37 [181.28]	72.81 [184.94]	72.25 [183.52]	29.50 [74.93]
SLC07-2084A	83.50 [212.09]	84.94 [215.74]	84.38 [214.31]	17.06 [43.33]
SLC07-2096A	95.50 [242.57]	96.94 [246.23]	96.38 [244.79]	17.12 [43.50]
SLC07-2108A	107.00 [271.78]	108.44 [275.44]	107.88 [274.00]	17.12 [43.50]
SLC07-2120A	118.50 [300.99]	119.94 [304.65]	119.38 [303.21]	23.18 [58.88]

CLASSIFIED UL EPH
ANSI/NSF 37
Air Curtain Fans for Customer Entry
12CS

PROJECT	
LOCATION	
ARCHITECT	
ENGINEER	
DWG. NO.	SLC07-AMB
DATE	28MAR2016
BY	S. Beil
REPLACES	14OCT14
BY	S. Beil

TITLE: BERNER
MODEL SLC07 CURTAIN
AMBIENT SYSTEM

BERNER INTERNATIONAL CORP.
NEW CASTLE,PA.