BLACK DIAMOND®

Project Name: _____

Location: _____

Item #: _____

Qty: _____

Black Diamond Single Tap Beer Dispenser, 6.5 Cu. Ft. Capacity, in Black

USBD-2428



Deliver dependable beer service with the Black Diamond Single Tap Beer Dispenser, engineered for commercial efficiency and durability. Featuring a black vinyl and stainless steel construction, the dispenser provides 6.5 Cu. Ft. capacity to accommodate kegs, cans, or bottles. Maintain ideal beverage temperatures from 33° to 40°F with fully automatic controls, while a manual cleaning feature supports easy maintenance. Ready for freestanding installation, this system ensures reliable performance in bars, restaurants, and pubs.

ELECTRIC

115V / 60Hz / 1 ph

Cord Length (Inches): 110.20"

Plug Type: NEMA 5-15P

Cord set included

NEMA 5-15P



3RD PARTY APPROVALS

C ETL LISTED US Intertek

ETL SANITATION LISTED Intertek

WARRANTY (USA / CANADA)

Two (2) Year Limited Warranty on Parts and Labor, Five (5) Year Warranty on Compressor and Evaporator

Contact us for details at 1.877.368.2797

2 YEARS PARTS & LABOR WARRANTY 5 YEARS COMPRESSOR

FEATURES AND CONSTRUCTION

- Capacity of 6.5 Cu. Ft. accommodates a half-barrel keg, cans, or bottles for flexible beverage service
- Features a rear-mounted 1/6 HP compressor cooling system designed for optimal refrigeration performance
- Constructed with a laminated black vinyl exterior and stainless steel interior for durability and lasting performance
- Maintains a consistent 33° to 40°F temperature range for ideal beverage storage and dispensing
- Hinged plastic-coated steel door with left swing, recessed handle, and integrated lock for secure access
- Includes adjustable shelving to maximize storage flexibility for kegs, cans, or bottles
- Equipped with four 4" locking casters for easy mobility and stable placement in high-traffic commercial environments
- Overall dimensions: 23.5"W x 30.2"D x 39.8"H fit standard bar layouts
- Integrated door lock ensures product security for commercial installations

STORAGE CAPACITY

- Cubic Feet: 6.5 Cu. Ft.
- Half Barrel Keg: 1
- 12 oz Cans: 30 6-pks, 12 oz Bottles: 42 6-pks

TEMPERATURE

- Holding Temperature (Fahrenheit): 33° - 40°

These models are designed to operate in an environment where temperature and humidity do not exceed 75°F (24°C) and 55% relative humidity

The Legacy Companies
3355 Enterprise Avenue, Suite 160 • Fort Lauderdale, FL 33331
Sales: 516-433-3535 • orders@admiralcraft.com • www.admiralcraft.com

Black Diamond Single Tap Beer Dispenser

USBD-2428

FRONT

SIDE

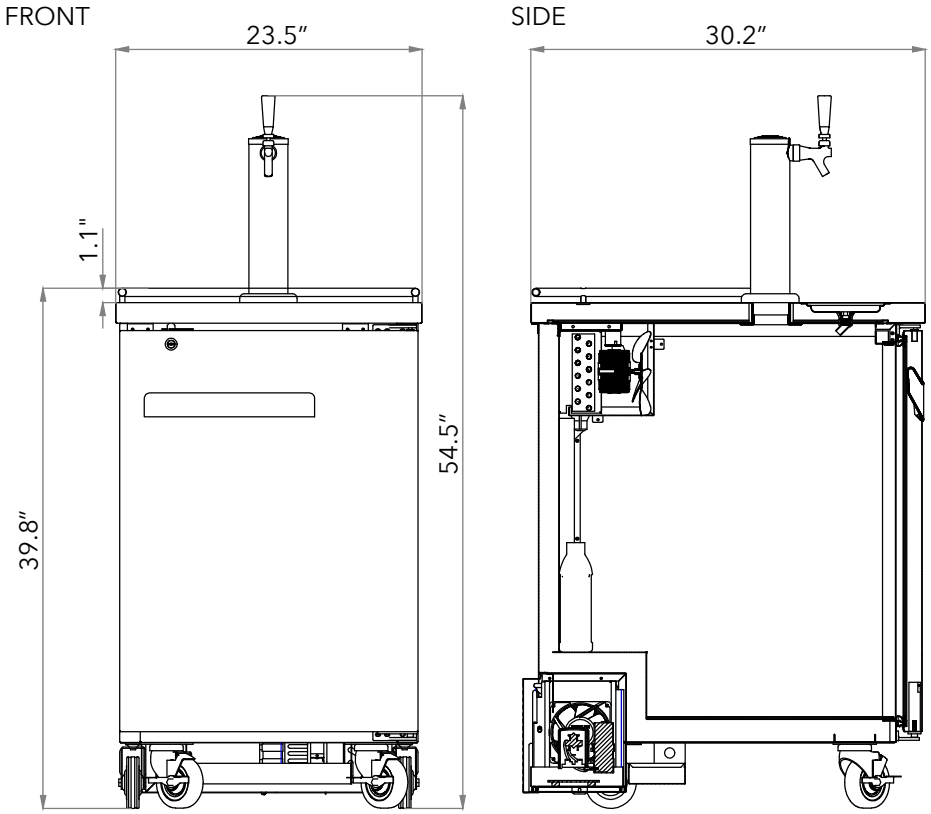

TOP

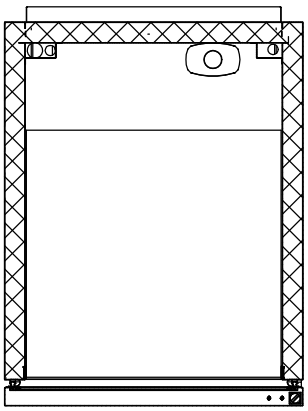

TOP

Beer Dispenser

Taps	Kegs (Half Barrels)	Doors	Shelves	Amps	HP	Refrigerant Type / Oz.	Assembled Dimensions (in)	Item Weight (lbs)	Shipping Weight (lbs)
1	1	1	0	1.7	1/6	R290 2.118	30.20" x 23.50" x 39.80"	133.0	176.0

Due to periodic changes in designs, methods, procedures, policies and regulations, the specifications contained in this document are subject to change without notice. While we exercise good faith efforts to provide information that is accurate, we are not responsible for errors or omissions in information provided or conclusions reached as a result of using the specifications. By using the information provided, the user assumes all risks in connection with such use.