BLACK DIAMOND®

Project Name: _____

Location: _____

Item #: _____

Qty: _____

Black Diamond 1 Door Narrow Depth Reach-In Freezer, 15.6 Cu. Ft. Capacity, in Stainless Steel

USFZ-1D/19



Ideal for reliable cold storage in commercial kitchens with limited space, the compact Black Diamond 1 Door Narrow Depth Reach-In Freezer features a slim profile for tight areas and is built with a robust 430 series stainless steel exterior and painted aluminum interior for lasting durability. Its self-closing solid door, removable wire shelves, and LED digital temperature controller ensure food stays frozen at the ideal temperature.

FEATURES AND CONSTRUCTION

- 15.6 Cu. Ft. storage capacity
- Narrower design is great for tight areas where space is limited
- Constructed of heavy-duty 430 series stainless steel exterior with a painted aluminum interior
- 1 self-closing solid door with a recessed handle
- 3 removable plastic-coated wire shelves
- Precise digital temperature controller with LED display
- Temperature range of -8° to 0°F keeps frozen food at the ideal temperature
- Bottom-mounted cooling unit slides out
- Removable door gasket
- Equipped with (4) 6" casters (2 locking and 2 non-locking) for easy mobility

ELECTRIC

115V / 60Hz / 1Ph

Cord Length (Inches): 90.60

Plug Type: NEMA 5-15P

Cord set included

NEMA 5-15P



3RD PARTY APPROVALS

C ETL LISTED US Intertek

ETL SANITATION LISTED Intertek

STORAGE CAPACITY

- Cubic Feet: 17.3 Cu. Ft.

TEMPERATURE

- Holding Temperature (Fahrenheit): -8° - 0°

These models are designed to operate in an environment where temperature and humidity do not exceed 75°F (24°C) and 55% relative humidity

WARRANTY (USA / CANADA)

Two (2) Year Limited Warranty on Parts and Labor, Five (5) Year Warranty on Compressor and Evaporator

Contact us for details at 1.877.368.2797

2 YEARS PARTS & LABOR WARRANTY 5 YEARS COMPRESSOR

The Legacy Companies
3355 Enterprise Avenue, Suite 160 • Fort Lauderdale, FL 33331
Sales: 516-433-3535 • orders@admiralcraft.com • www.admiralcraft.com

Black Diamond 1 Door Narrow Depth Reach-In Freezer

USFZ-1D/19

FRONT

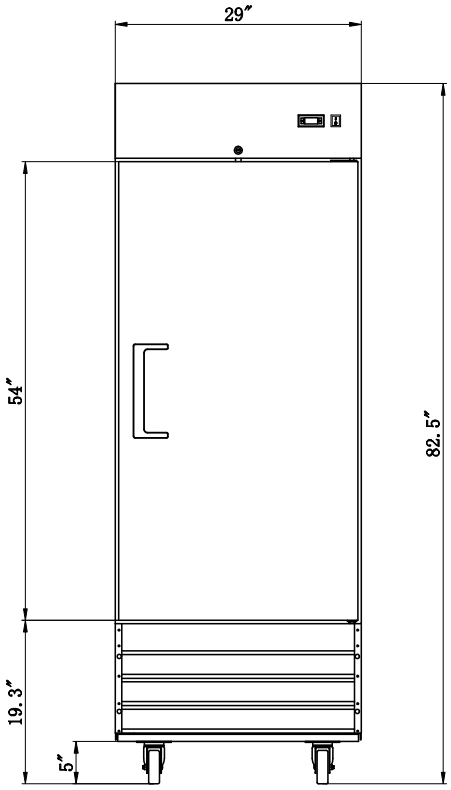

SIDE

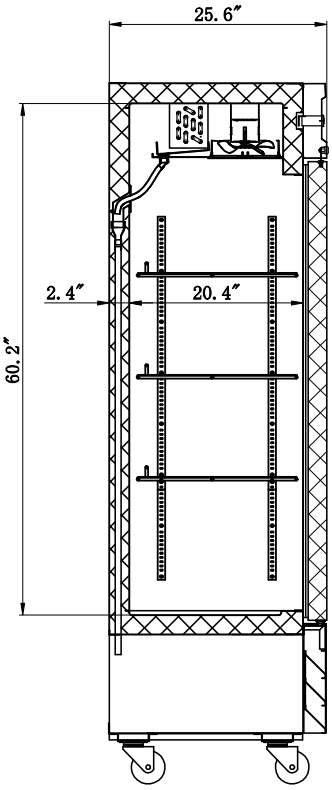

TOP

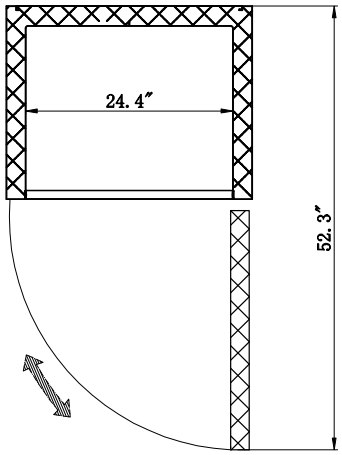

Reach-In

Doors	Shelves	Amps	HP	Refrigerant	Assembled Dimensions (in)	Item Weight (lbs)	Shipping Weight (lbs)
1	3	3.8A	3/4	R290 4.0595	29.00" x 25.50" x 82.50"	282.0	279.0

Due to periodic changes in designs, methods, procedures, policies and regulations, the specifications contained in this document are subject to change without notice. While we exercise good faith efforts to provide information that is accurate, we are not responsible for errors or omissions in information provided or conclusions reached as a result of using the specifications. By using the information provided, the user assumes all risks in connection with such use.