BLACK DIAMOND®

Project Name: _____

Location: _____

Item #: _____

Qty: _____

Black Diamond 2 Door Reach-In Freezer, 46.7 Cu. Ft., in Stainless Steel

USFZ-2D



The Black Diamond 2 Door Reach-In Freezer is designed to deliver reliable high-volume cold storage for commercial kitchens, bakeries, grocery stores, and catering operations. Crafted from heavy-duty stainless steel inside and out, it offers superior durability and a sleek, professional appearance. Two self-closing solid doors with recessed handles and a generous 46.7 Cu. Ft. capacity keep frozen food safe and accessible. Digital temperature controls, automatic defrosting, and six removable wire shelves enhance usability and food safety. The robust bottom-mount compressor ensures efficient operation, while four smooth-rolling casters provide mobility for cleaning and repositioning.

ELECTRIC

115V / 60Hz / 1Ph

Cord Length (Inches): 98.40"

Plug Type: NEMA 5-15P

Cord set included

NEMA 5-15P



3RD PARTY APPROVALS

C ETL LISTED US Intertek

ETL SANITATION LISTED Intertek

WARRANTY (USA / CANADA)

Two (2) Year Limited Warranty on Parts and Labor, Five (5) Year Warranty on Compressor and Evaporator

Contact us for details at 1.877.368.2797

2 YEARS PARTS & LABOR WARRANTY 5 YEARS COMPRESSOR

FEATURES AND CONSTRUCTION

- 46.7 Cu. Ft. storage capacity
- Slide out bottom mounted self-contained refrigeration
- Constructed of heavy-duty stainless steel both inside and out
- Temperature range of -8° to 0° keeps frozen food at the ideal temperature
- Uses R290 refrigeration
- 7' power cord with NEMA 5-15 plug from the back of the unit
- 6 removable plastic-coated wire shelves
- Equipped with (4) 4" casters for easy mobility
- Measures 32.2"L x 54"W x 82.5"H
- 2 self-closing solid doors with recessed handles

STORAGE CAPACITY

- Cubic Feet: 46.7 Cu. Ft.

TEMPERATURE

- Holding Temperature (Fahrenheit): -8° - 0°

These models are designed to operate in an environment where temperature and humidity do not exceed 75°F (24°C) and 55% relative humidity

The Legacy Companies
3355 Enterprise Avenue, Suite 160 • Fort Lauderdale, FL 33331
Sales: 516-433-3535 • orders@admiralcraft.com • www.admiralcraft.com

Black Diamond 2 Door Reach-In Freezer

USFZ-2D

FRONT

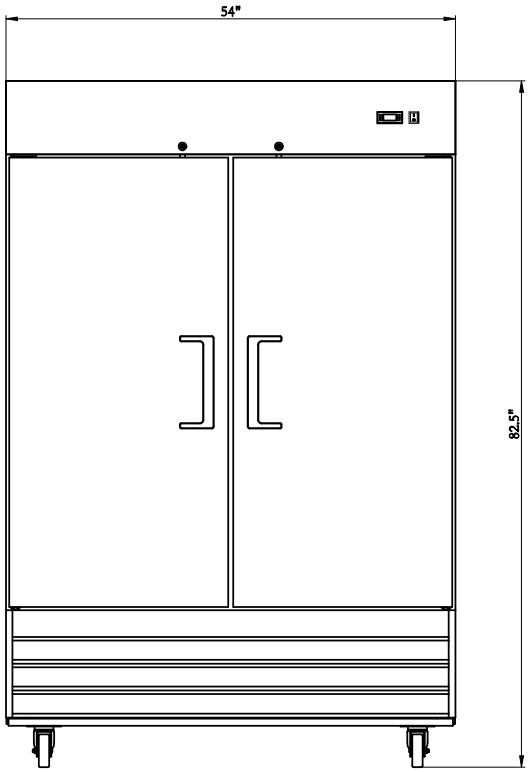

SIDE

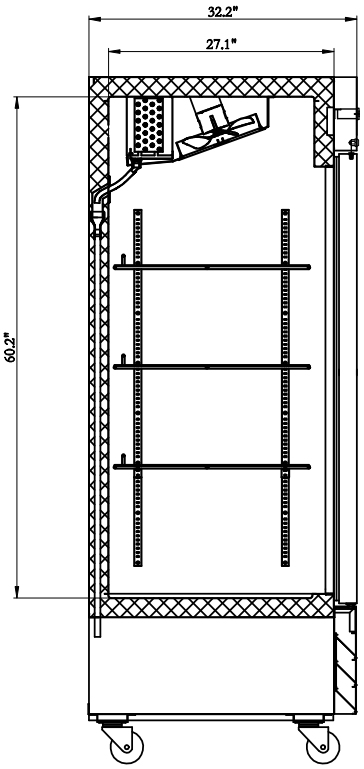

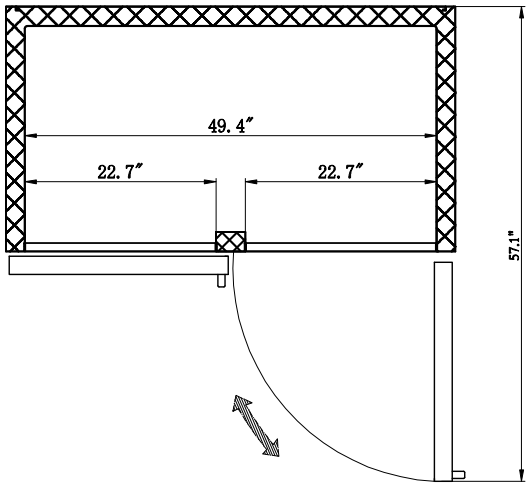

TOP

Reach-In

Doors	Shelves	Amps	HP	Refrigerant	Assembled Dimensions (in)	Item Weight (lbs)	Shipping Weight (lbs)
2	6	8.5A	1	R290 4.589	54.00" x 32.20" x 82.50"	446.6	535.0

Due to periodic changes in designs, methods, procedures, policies and regulations, the specifications contained in this document are subject to change without notice. While we exercise good faith efforts to provide information that is accurate, we are not responsible for errors or omissions in information provided or conclusions reached as a result of using the specifications. By using the information provided, the user assumes all risks in connection with such use.