BLACK DIAMOND®

Project Name: _____

Location: _____

Item #: _____

Qty: _____

Black Diamond 2 Glass Door Reach-In Refrigerator, 46.7 Cu. Ft. Capacity, in Stainless Steel

USRF-2D-G



The Black Diamond 2 Glass Door Reach-In Refrigerator delivers robust refrigerated storage for demanding commercial environments, featuring heavy-duty stainless steel construction for durability and easy cleaning. With two self-closing glass doors and a generous 46.7 Cu. Ft. capacity, users benefit from convenient access and clear visibility of contents without opening the doors. Six adjustable shelves help maximize organization for diverse ingredients, while automatic defrost and a bottom-mounted compressor enhance efficiency and performance. Digital temperature control ensures precise freshness between 33° and 40°F, with an integrated lock for added security. Supported by a two-year warranty on parts and labor and a five-year compressor warranty.

ELECTRIC

115V / 60Hz / 1Ph

Cord Length (Inches): 98.40"

Plug Type: NEMA 5-15P

Cord set included

NEMA 5-15P



3RD PARTY APPROVALS

C ETL LISTED US Intertek

ETL SANITATION LISTED Intertek

WARRANTY (USA / CANADA)

Two (2) Year Limited Warranty on Parts and Labor, Five (5) Year Warranty on Compressor and Evaporator

Contact us for details at 1.877.368.2797

2 YEARS PARTS & LABOR WARRANTY 5 YEARS COMPRESSOR

FEATURES AND CONSTRUCTION

- 46.7 Cu. Ft. storage capacity
- Slide out bottom mounted self-contained refrigeration
- Constructed of heavy-duty stainless steel both inside and out
- 6 removable plastic-coated wire shelves
- Front digital temperature controller with LED display
- Temperature range of 33° to 40°F is ideal for preserving freshness
- Automatic defrosting
- 2 self-closing glass doors with recessed handles
- Removable door gasket
- Equipped with 4 casters for easy mobility

STORAGE CAPACITY

- Cubic Feet: 46.7 Cu. Ft.

TEMPERATURE

- Holding Temperature (Fahrenheit): 33° - 40°

These models are designed to operate in an environment where temperature and humidity do not exceed 75°F (24°C) and 55% relative humidity

The Legacy Companies
3355 Enterprise Avenue, Suite 160 • Fort Lauderdale, FL 33331
Sales: 516-433-3535 • orders@admiralcraft.com • www.admiralcraft.com

Black Diamond 2 Glass Door Reach-In Refrigerator

USRF-2D-G

FRONT

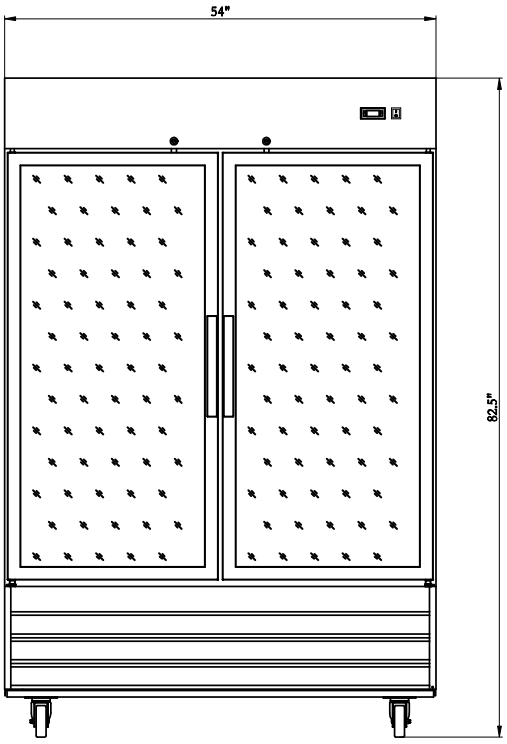

SIDE

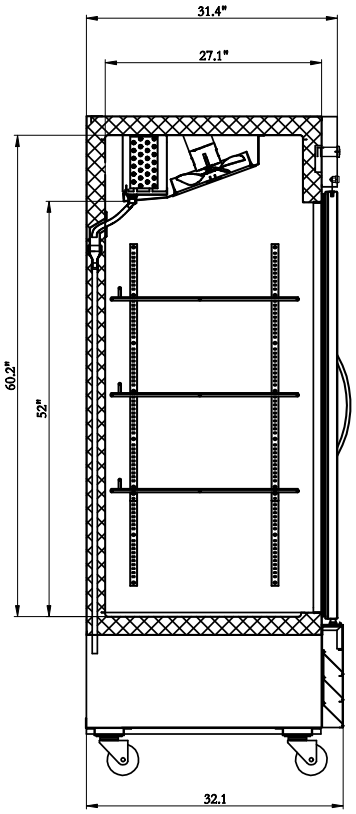

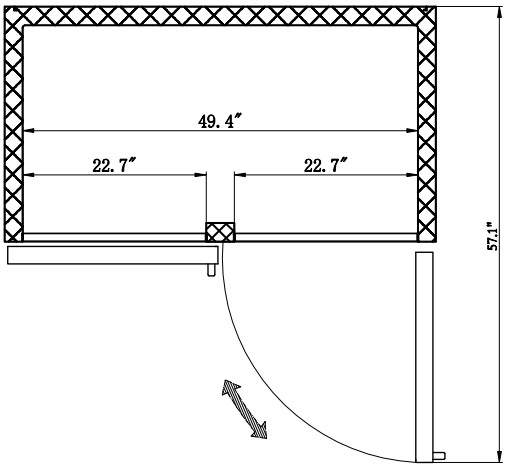

TOP

Reach-In

Doors	Shelves	Amps	HP	Refrigerant	Assembled Dimensions (in)	Item Weight (lbs)	Shipping Weight (lbs)
2	6	6.2A	0.75	R290 4.589	29.50" x 25.50" x 82.50"	447.0	530.0

Due to periodic changes in designs, methods, procedures, policies and regulations, the specifications contained in this document are subject to change without notice. While we exercise good faith efforts to provide information that is accurate, we are not responsible for errors or omissions in information provided or conclusions reached as a result of using the specifications. By using the information provided, the user assumes all risks in connection with such use.