Jackson®
Warewashing Systems

RackStar® 44 with Energy Recovery

Project _____
Item _____
Quantity _____
CSI Section 11400
Approval _____
Date _____

RackStar® 44 with Energy Recovery

Models

RackStar 44 with Energy Recovery

Standard Features

- Energy Recovery
- Adjustable Rinse System
- 27kW electric booster heater
- Rainbow Rinse™ with arched rinse arm design
- 19-3/4" (502 mm) clearance
- WISR® Cleaning System
- Double-wall insulated doors retain heat, keeping wash water hot & generating less heat in the dishroom
- Self-cleaning wash arms
- Fully automatic, including auto-fill
- Adjustable vent cowl collars
- Exclusive EnergyGuard™ controls
- Self-draining stainless steel wash pump
- Digital LED control panel
- Strike plate table limit switch
- Large front access for ease of maintenance
- Stainless steel strainer pans
- Splash shields
- Stainless steel frame and legs
- Exhaust vent fan control
- Built-in pressure regulator
- 15kW wash tank heater
- Front dress panel
- Adjustable bullet feet

Mandatory Specs

Specify Voltage_____

Specify Direction of Operation:

☐ Left to Right
☐ Right to Left

Options

☐ Higher than Standard Chamber Height
☐ Single Point Connection
☐ 23" (584 mm) Unhooded Side Loader
☐ 30" (762 mm) Unhooded Side Loader
☐ Flanged Feet
☐ Prison Package

Accessories

☐ 36-Compartment Rack
  ☐ 4-1/8" tall (104 mm)
  ☐ 5 - 5/8" tall (143 mm)
  ☐ 7" tall (178 mm)
☐ Combination Rack
☐ Peg Rack
☐ Sheet Pan Rack
☐ Drain Water Tempering Kit*
☐ Scaltrol
☐ Water Hammer Arrestor

**Requires separate electrical connection*

Specifications

Uses 0.35 gallons of water (1.32 liters) per rack in Econo Rinse mode

Uses 0.52 gallons of water (1.97 liters) per rack in Turbo Rinse mode

Cleans 223 racks per hour

Durable stainless steel construction

Intertek

Intertek

RackStar® 44 with optional Energy Recovery

Left to Right

LEGEND

A - Electrical Connection
B - Water Inlet
(1/2" NPT, 110 °F MIN (27 kW Booster))
C - Drain Connection
(1 1/2" NPT)
D - Vent Connections
(Including Dampers)
E - Energy Recovery Water Inlet
(1/2" NPT, 55 °F MIN)

— — — *- Open Door*

- - - - - - - *- High Hood Option*

All dimensions from the floor can be increased 1 3/4" using the machine's adjustable feet.

Items in red are not supplied with the machine.

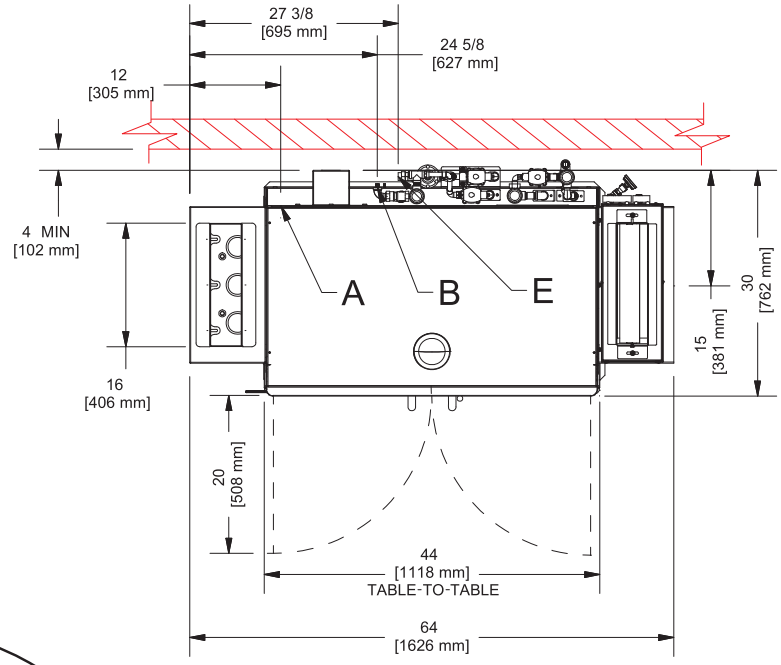

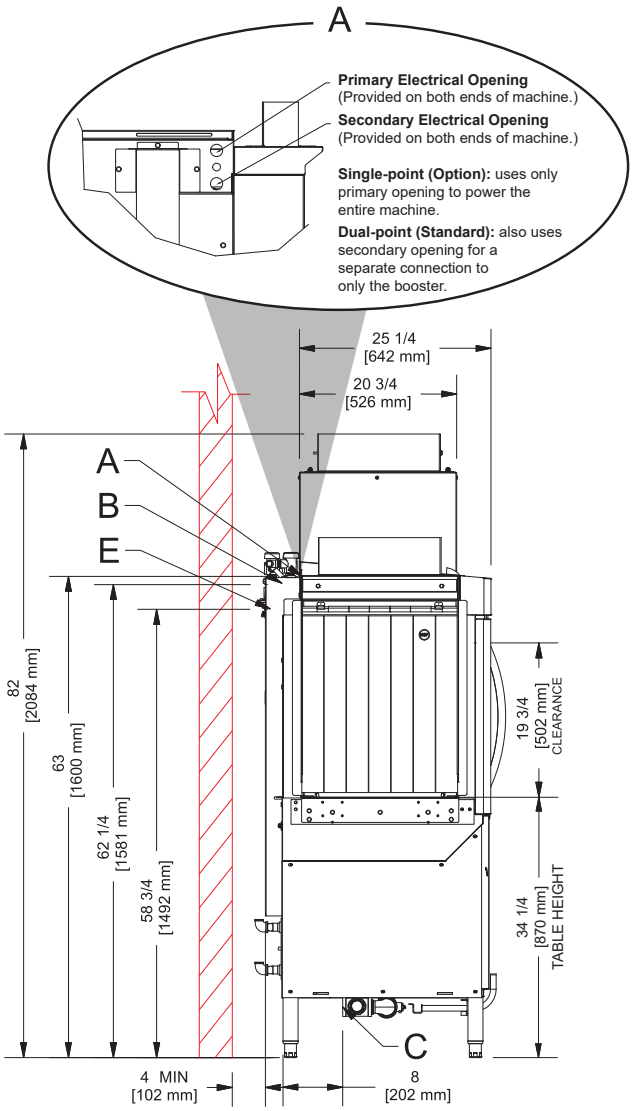

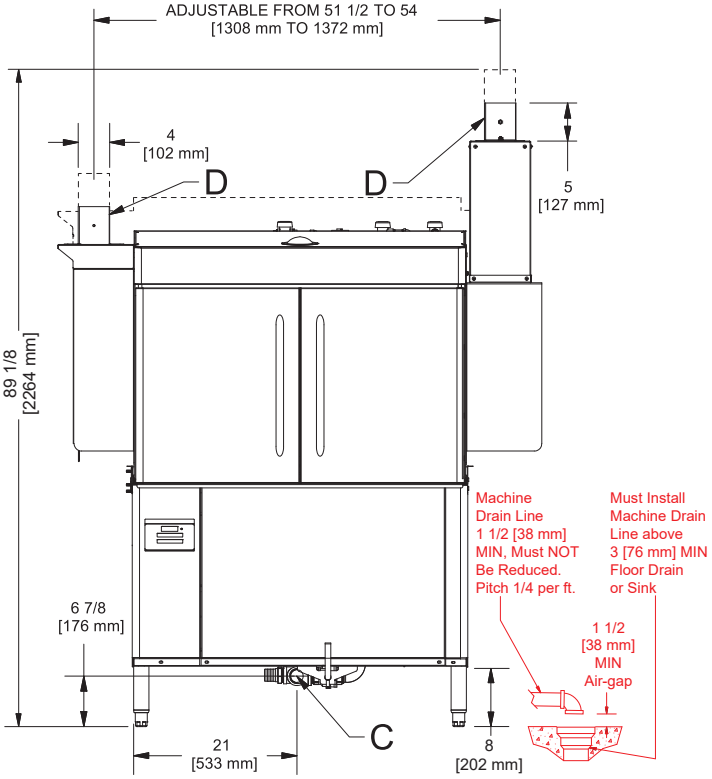

LEGEND

A - Electrical Connection
B - Water Inlet
(1/2" NPT, 110 °F MIN (27 kW Booster))
C - Drain Connection
(1 1/2" NPT)
D - Vent Connections
(Including Dampers)
E - Energy Recovery Water Inlet
(1/2" NPT, 55 °F MIN)

— — — *- Open Door*

- - - - - - - *- High Hood Option*

All dimensions from the floor can be increased 1 3/4" using the machine's adjustable feet.

Items in red are not supplied with the machine.

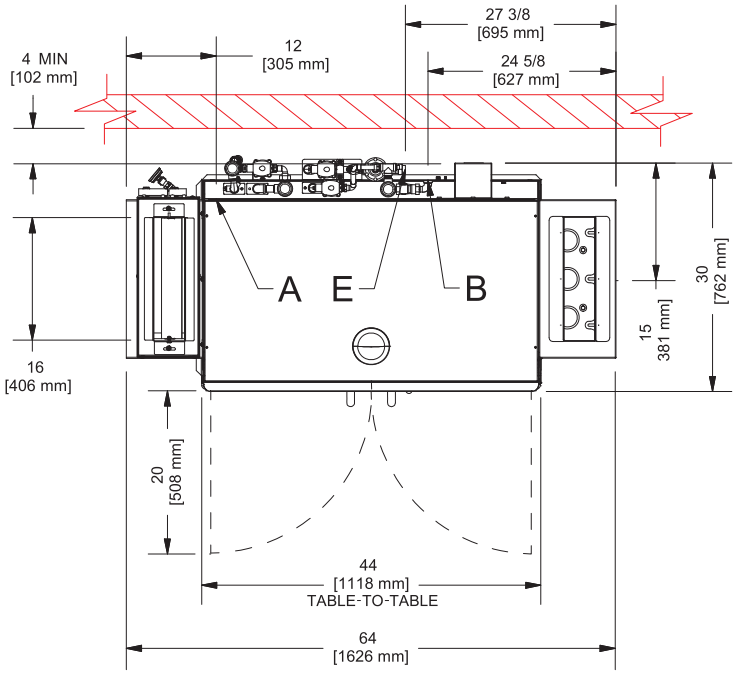

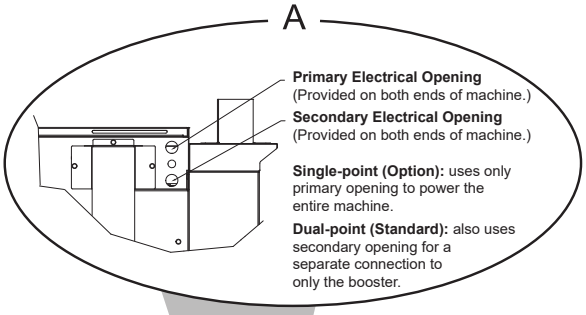

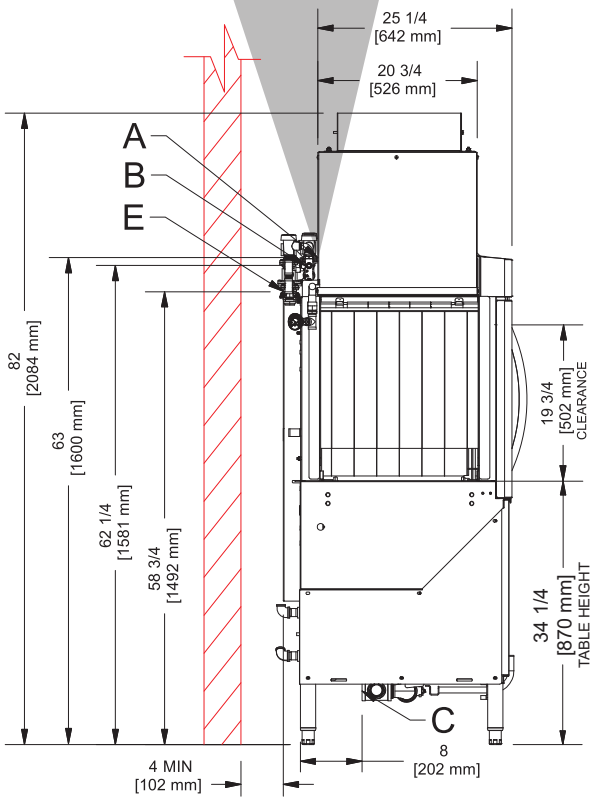

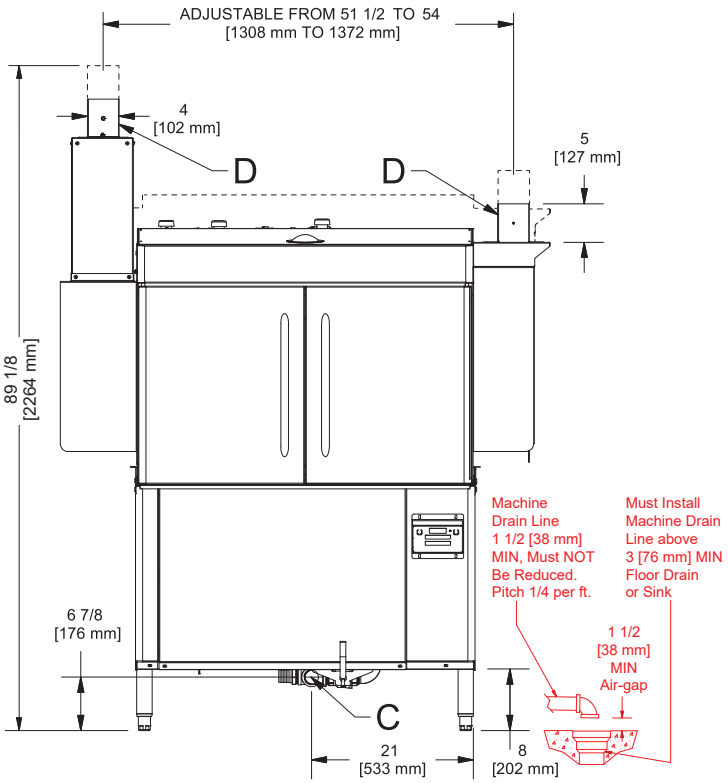

Jackson®
Warewashing Systems

RackStar® 44 with Energy Recovery

RECOMMENDED TABLE FABRICATION

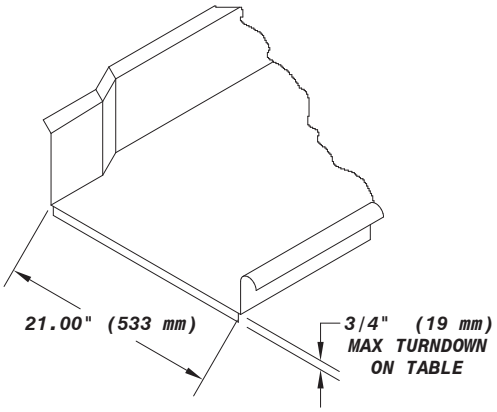

TABLE CONNECTION

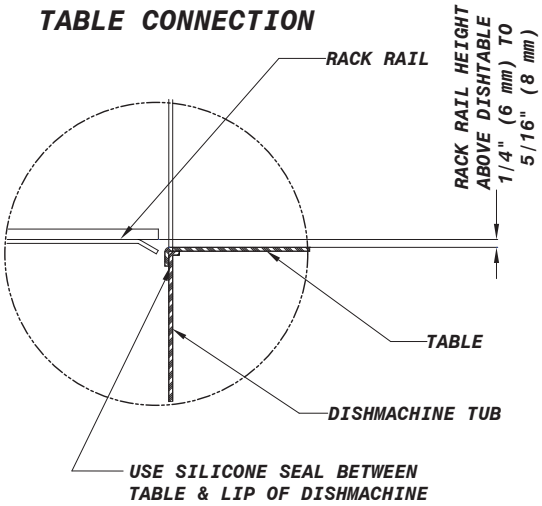

MODEL NO.	MACHINE DIMENSIONS				DRAIN HEIGHT	SHIPPING INFORMATION					
	HEIGHT	LENGTH BETWEEN DISHTABLES	DEPTH	DEPTH WITH DOORS OPEN		WEIGHT	CLASS	CUBE	HEIGHT	WIDTH	DEPTH
RackStar 44 ER	82″ (2084 mm)	44″ (1118 mm)	30″ (762 mm)	50″ (1270 mm)	6-1/2″ (165 mm)	880 lbs (400 kg)	150	131.94 cu. ft.	75″ (1905 mm)	76″ (1931 mm)	40″ (1016 mm)

OPERATING CAPACITY	
Racks per Hour	223
Dishes per Hour	5,575
Glasses per Hour	8,028

OPERATING TEMPERATURES	
Wash (minimum)	160° F (71° C)
Rinse (minimum)	180° F (82° C)

ELECTRICAL REQUIREMENTS			
Power Supply	Total Load	Minimum Circuit Ampacity	Maximum Overcurrent Protection
SINGLE POINT CONNECTION			
208/60/3	126.8 A	129.1 A	140 A
230/60/3	109.3 A	111.4 A	120 A
460/60/3	54.8 A	55.9 A	60 A
208/60/1	216.8 A	220.2 A	230 A
230/60/1	185.8 A	188.8 A	200 A
DUAL POINT CONNECTION			
208/60/3 - Machine	51.9 A	54.2 A	60 A
208/60/3 - 27kW Booster	74.9 A	76.2 A	80 A
230/60/3 - Machine	44.3 A	46.4 A	50 A
230/60/3 - 27kW Booster	65.0 A	66.3 A	70 A
460/60/3 - Machine	22.3 A	23.4 A	25 A
460/60/3 - 27kW Booster	32.5 A	33.8 A	35 A
208/60/1 - Machine	87.0 A	90.4 A	100 A
208/60/1 - 27kW Booster	129.8 A	131.1 A	135 A
230/60/1 - Machine	73.3 A	76.3 A	85 A
230/60/1 - 27kW Booster	112.5 A	113.8 A	115 A

WATER REQUIREMENTS	
Hot water inlet temperature (minimum)	110° F (43° C)
Cold water inlet temperature (minimum)	55° F (43° C)
Gallons per Hour (Econo Rinse mode)	78 gal (295 L)
Gallons per Hour (Turbo Rinse mode)	116 gal (239.1 L)
Gallons per Rack (Econo Rinse mode)	0.35 gal (1.3 L)
Gallons per Rack (Turbo Rinse mode)	0.52 gal (1.97 L)
Waterline Size NPT	1/2″
Drainline Size IPS (minimum)	1-1/2″
Flow Pressure (PSI)	15
Flow Rate GPM (minimum)	1.3 (4.9 LPM)
Wash Tank Capacity	25 gal (95 L)

WASH PUMP	
Wash Pump Motor	3 hp
Wash Pump Capacity	270 GPM (1022 LPM)

CONVEYOR	
Conveyor Motor	1/4 hp
Conveyor Speed (feet per minute)	6.07 FPM (1.85 MPM)

VENTING REQUIREMENTS	
Input End	175 CFM
Output End	175 CFM
Total CFM	350 CFM

HOW TO SPECIFY: RackStar 44 with Energy Recovery

Jackson WWS, Inc.
Shipping Address: 6209 North U.S. Highway 25E, Gray, KY 40734
Mailing Address: P.O. Box 1060, Barbourville, KY 40906
Telephone: 888-800-5672 • Fax: 606-523-1799
Email: info@jacksonwws.com
07610-004-41-36 [07/26/21]

www.jacksonwws.com

We reserve the right to change specifications in this bulletin without incurring any obligation for equipment previously or subsequently sold.