# Machine Stands

## HST Stands for Meridian Series Ice & Water Dispensers
## IOBDMS Stands for ID Series Ice Only Dispensers

## Features

HST16-A & HST21-A

- Stainless steel construction for optimum durability.
- Space saving design.
- Includes reversible locking door for maximum functionality.
- Inside cabinet features ample storage space with a steel shelf.
- Includes 6" adjustable legs.
- Designed to fit perfectly with Meridian dispensers.
- Back panel designed for easy dispenser utility.

**HST16-A**

**HST16B-A**

**HST21-A**

**HST21B-A**

**IOBDMS22 & IOBDMS30**

HST16B-A & HST21B-A

- Stainless steel construction for optimum durability.
- Space saving design.
- Includes 6" adjustable legs.
- Designed to fit perfectly with Meridian dispensers.
- Back panel designed for easy dispenser utility.

IOBDMS22 & IOBDMS30

- Stainless steel construction for optimum durability.
- Designed to have utility connections hidden from view.

## Dimensions (W x D x H)

| Model # | Compatible Dispenser | W x D x H* |
|---|---|---|
| HST16-A | HID312 | 16.5" x 23.75" x 32" (41.9 x 60.3 x 81.3 cm) |
| HST16B-A | HID312 | 16.5" x 23.75" x 32" (41.9 x 60.3 x 81.3 cm) |
| HST21-A | HID525 & HID540 | 21.5" x 23.75" x 32" ( 54.6 x 60.3 x 81.3 cm) |
| HST21B-A | HID525 & HID540 | 21.5" x 23.75" x 32" ( 54.6 x 60.3 x 81.3 cm) |
| IOBDMS22 | ID150 | 22" x 30" x 30" (55.8 x 76.2 x 76.2 cm) |
| IOBDMS30 | ID200 & ID250 | 30" x 30" x 30" (76.2 x 76.2 x 76.2 cm) |

* Includes 6" legs

## Certification

DESIGNED ENGINEERED ASSEMBLED USA

CERTIFIED ISO 9001:2015

REVIT by Scotsman

## Shipping Information

| Model # | Carton (W x D x H) | Weight (lb/kg) |
|---|---|---|
| HST16-A | 17.5" x 25" x 32.5" | 50/23 |
| HST16B-A | 17.5" x 25" x 32.5" | 50/23 |
| HST21-A | 23" x 25" x 32.5" | 80/36 |
| HST21B-A | 23" x 25" x 32.5" | 80/36 |
| IOBDMS22 | 26" x 32" x 27" | 93/42 |
| IOBDMS30 | 34" x 33" x 28" | 120/54 |

## Warranty

- 1 years parts and labor on all components.
- Warranty valid in North, South & Central America for commercial installations.
- Contact factory for warranty in other regions.
- Residential Applications: 1 year parts and labor



Scotsman
101 Corporate Woods Parkway, Vernon Hills, IL 60061
1-800-SCOTSMAN • Fax: 847-913-9844 • www.scotsman-ice.com • customer.relations@scotsman-ice.com

## HST16

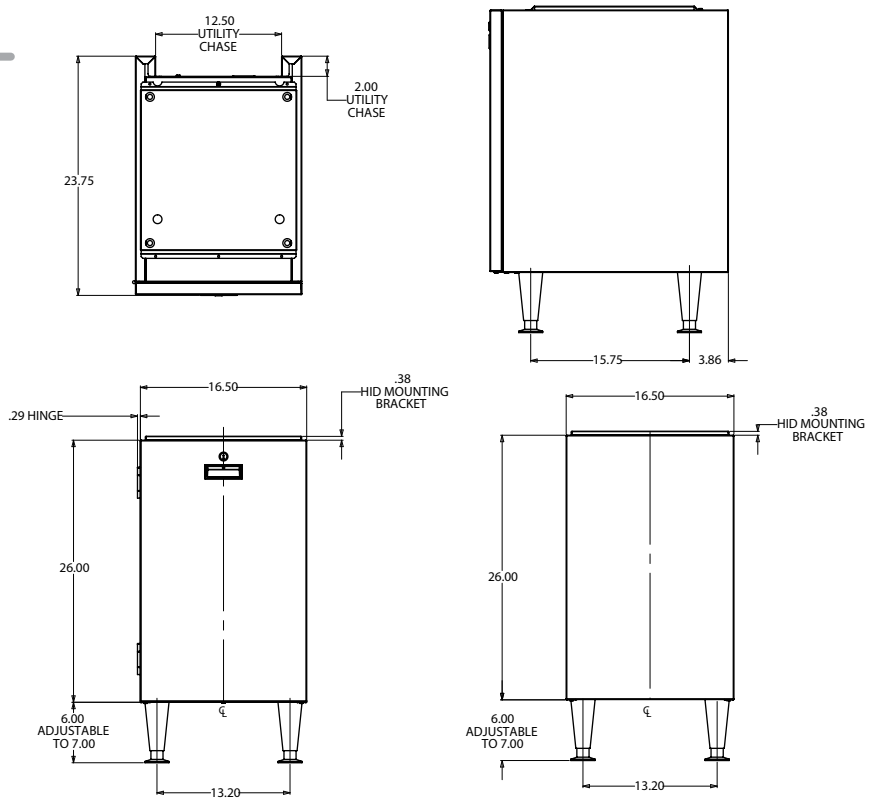


FRONT: HST16-A

FRONT: HST16B-A

## HST21

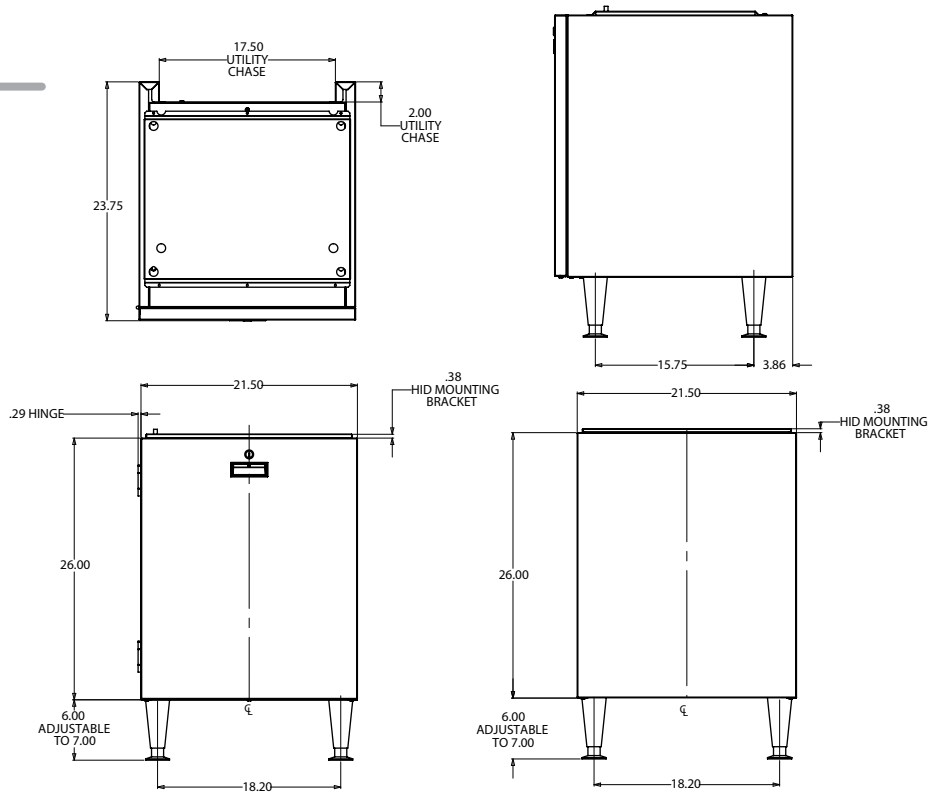


FRONT: HST21-A

FRONT: HST21B-A


101 Corporate Woods Parkway, Vernon Hills, IL 60061
1-800-SCOTSMAN Fax: 847-913-9844 www.scotsman-ice.com customer.relations@scotsman-ice.com



© 2018 Scotsman Ice Systems.