True Ice Series

Modular Commercial Cube Ice Machine

Model: TCIM-630

- Produces up to **630 lbs** (286 kg) of ice per 24 hours
- Exceeds ENERGY STAR® standards by **up to 37%**
- Eco-friendly **R290** refrigerant: **5.1 oz** (145 g)
- **One-touch** cleaning

AIR-COOLED COMMERCIAL ICE MACHINE

(TCIM-630-HA1-A ice machine on TIB-530 bin. Sold separately.)

30" W x 24" D x 22" H
(76.2 x 61 x 56 cm)

natural refrigerant. c UL us ENERGY STAR

MADE WITH INNOVATION IN THE USA AQ

CUBE SIZES

HALF
3/8" x 1-1/8" x 7/8"
(9.5 x 28.6 x 22.2 mm)

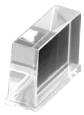

FULL
7/8" x 7/8" x 7/8"
(22.2 x 22.2 x 22.2 mm)

LARGE
1-1/8" x 1-1/8" x 7/8"
(28.6 x 28.6 x 22.2 mm)

FEATURES & BENEFITS

Maximum Efficiency & Superior Sanitation

- **Patented TrueNcapsuL8® Evaporator:** Fully insulated and sealed for maximum efficiency while inhibiting the growth of mold, bacteria, and biofilm on the backside of the evaporator plate.
- **Industry-leading cycle times:** fast ice production with no harvest assist required.
- **Wide Operating Range: 35 °F to 110 °F** (1.6 °C to 43.3 °C).
- **TrueGuard™ Antimicrobial Protection:** Integrated into molded components, storage bin liner, and bin door.
- **TrueZone®:** Continuous air purification in the food zone and storage bin with growth-inhibiting technology. *(Optional accessory, sold separately).*
- **One-touch cleaning** and tool-free removable components for simplified cleaning and maintenance.

Monitoring, Programming & Predictive Diagnostics

- **TrueTouch® Smart Touchscreen:** 4.3 in (11 cm) display featuring real-time ice level monitoring, live system status, and diagnostics without complex error codes.
- **Time-of-Flight (ToF) Technology:** Real-time ice level and usage monitoring to **right-size equipment and maximize efficiency**, eliminating the need for thermostat kits.
- **Ice production scheduling.**
- **Gauge-Free Diagnostics:** Integrated high- and low-pressure transducers allow **service without external gauges**.
- **Real-Time Alerts:** Visual, audible, and push notifications.

Remote Monitoring*

- **TrueConnect®:** Remote access to system data enables **predictive diagnostics and proactive maintenance**, identifying potential issues before they impact operations.
- **Location-based performance optimization.**
- Remote **shutdown** capability.

*Coming soon to the marketplace.

TRUE MANUFACTURING CO., INC. 2001 East Terra Lane • O'Fallon, Missouri 63366-4434 • Fax 636.980.3541 • Toll Free 888.818.8783 • truemfg.com/true-ice/

True Ice Series

Modular Commercial Cube Ice Machine

Model: TCIM-630

PLAN VIEW

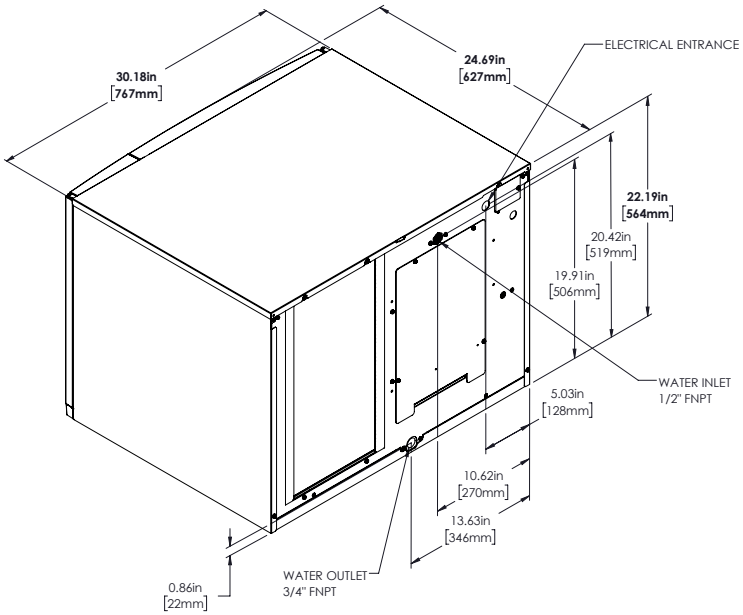

CLEARANCE

PLEASE NOTE: air-cooled units **require 6" (152.4mm) clearance** for air intake and exhaust on the left, right, and back sides.

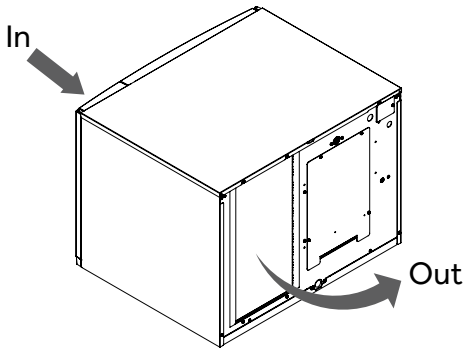

ADDITIONAL FEATURES

- **TrueTech® clear-coated exterior:** Corrosion and fingerprint resistant
- **Removable air filter** and RCU technology
- **Micro-channel condenser** for superior efficiency
- **Ultra-quiet** fan operation

SPECIFICATIONS

AIR COOLED			ICE PRODUCTION / 24 HOURS				
True Ice Series Model	Cube Size	Crated Weight (lbs)	**70°F Air / 50°F Water** (21° Air / 10°C Water)	**90°F Air / 70°F Water*** (32° Air/21°C Water)			Peak Heat of Rejection BTU/hr
			Ice Production (lbs)	Ice Production (lbs)	Potable Water Consumption/100lb	Electrical Consumption/100lb	
TCIM-630-HA1-A •	Half	190 (86 kg)	630 (286 kg)	556 (252 kg)	13.8 gal	3.95 kWh	8,500
TCIM-630-FA1-A •	Full		615 (279 kg)	508 (231 kg)	14.2 gal	4.25 kWh	
TCIM-630-LA1-A •	Large		600 (272 kg)	500 (227 kg)	14.5 gal	4.50 kWh	

• Energy Star Model

ELECTRICAL		CONNECTIONS	
Voltage	Min Circuit Ampacity	Potable Water In	1/2" Female NPT
115/60/1	15	Water Out	3/4" Female NPT
		Electrical Connection Junction Box	104-127 VAC/60Hz/1

OPERATING REQUIREMENTS		
	Minimum	Maximum
Ambient Air Temp	35°F (1.7°C)	110°F (43.3°C)
Water Temp	35°F (1.7°C)	100°F (37.7°C)
Water Pressure	20 psi (138 kPa)	100 psi (689 kPa)

ACCESORIES

- **TrueZone®** ozone air purification device
- **True Platinum / Standard** water filter kits & replacement cartridges

3 YEAR Parts + Labor • 5 YEAR Parts Only / Compressor • 5 YEAR Parts + Labor / Evaporator
WARRANTY

*For additional information please visit Energy Star's website.