TRUE MANUFACTURING CO., INC.
U.S.A. FOODSERVICE DIVISION
2001 East Terra Lane • O'Fallon, Missouri 63366-4434 • (636)240-2400
Fax (636)272-2408 • Toll Free (800)325-6152 • Intl Fax# (001)636-272-7546
Parts Dept. (800)424-TRUE • Parts Dept. Fax# (636)272-9471 • www.truemfg.com

Project Name: _____
Location: _____
Item #: _____ *Qty:* _____
Model #: _____

AIA #
SIS #

Model:
TFP-32-12M-HC

Food Prep Table:
Food Prep Unit with Hydrocarbon Refrigerant



TFP-32-12M-HC

- True's food prep units are designed with enduring quality that protects your long term investment.
- Factory engineered, self-contained, capillary tube system using environmentally friendly R290 hydro carbon refrigerant that has zero (0) ozone depletion potential (ODP), & 0.02 global warming potential (GWP).
- High capacity, factory balanced environmentally friendly forced-air refrigeration system holds 33°F to 41°F (.5°C to 5°C).
- All stainless steel front, top and ends. Corrosion resistant GalFan coated steel back.
- Interior - attractive, clear coated aluminum liner. Stainless steel floor with coved corners.
- 8" (204 mm) deep, ½" (13 mm) thick, full length removable cutting board included. Sanitary, high density white polyethylene provides tough preparation surface.
- Foamed-in-place using a high density, polyurethane insulation that has zero ozone depletion potential (ODP) and zero global warming potential (GWP).

ROUGH-IN DATA

Specifications subject to change without notice.
Chart dimensions rounded up to the nearest ⅛" (millimeters rounded up to next whole number).

Model	Doors	Shelves	Pans (top)	Cabinet Dimensions (inches) (mm) W	D†	H*	HP	Voltage	Amps	NEMA Config.	Cord Length (total ft.) (total m)	Crated Weight (lbs.) (kg)
TFP-32-12M-HC	1	2	12	32⅛ 816	31½ 801	45¾ 1162	⅓ N/A	115/60/1	3.3 N/A	5-15P	7 2.13	315 143

† Depth does not include 2" (51 mm) for cutting board.
* Height does not include ¾" (19 mm) for castors.

DESIGNED WITH INNOVATION IN THE USA

5/26 Printed in U.S.A.

APPROVALS:

AVAILABLE AT:

Model:
TFP-32-12M-HC

Food Prep Table:
Food Prep Unit with Hydrocarbon Refrigerant

STANDARD FEATURES

DESIGN
- True's commitment to using the highest quality materials and oversized refrigeration systems provides the user with colder product temperatures, lower utility costs, exceptional food safety and the best value in today's food service marketplace.

REFRIGERATION SYSTEM
- Factory engineered, self-contained, capillary tube system using environmentally friendly R290 hydro carbon refrigerant that has zero (0) ozone depletion potential (ODP), & 0.02 global warming potential (GWP). Energy saving, factory balanced refrigeration system with guided airflow to provide uniform temperature in food pans and cabinet interior.
- Energy saving, factory balanced refrigeration system with guided airflow to provide uniform temperature in food pans and cabinet interior.
- Exclusive forced-air design holds 33°F to 41°F (.5°C to 5°C) product temperature in food pans and cabinet interior. Complies with and listed under ANSI/NSF-7.
- High efficiency evaporator fan motor and larger fan blades give True Food Prep units a more efficient, low velocity, high volume airflow design.
- Easy access to all condensing unit components from back of cabinet.

CABINET CONSTRUCTION
- Exterior - stainless steel front, top and ends. Corrosion resistant GalFan coated steel back.
- Interior - attractive, clear coated aluminum liner. Stainless steel floor with coved corners.
- Insulation - entire cabinet structure is foamed-in-place using a high density, polyurethane insulation that has zero ozone depletion potential (ODP) and zero global warming potential (GWP).
- 2½" (64 mm) diameter castors - locks provided on front set.

DOOR
- Stainless steel exterior with clear aluminum liner to match cabinet interior.
- Door fitted with 12" (305 mm) long recessed handle that is foamed-in-place with a sheet metal interlock to ensure permanent attachment.
- Magnetic door gaskets of one piece construction, removable without tools for ease of cleaning.

SHELVING
- Two (2) adjustable, heavy duty PVC coated wire shelves 27 11/16"L x 20"D (703 mm x 508 mm). Four (4) chrome plated shelf clips included per shelf.
- Shelf support pilasters made of same material as cabinet interior; shelves are adjustable on ½" (13 mm) increments.

MODEL FEATURES
- Evaporator is epoxy coated to eliminate the potential of corrosion.
- 8" (204 mm) deep, full length removable cutting board. Sanitary, high-density white polyethylene provides tough preparation surface.
- Stainless steel, patented, foam insulated lid and hood keep pan temperatures colder, lock in freshness and minimize condensation. Removable for easy cleaning.
- Comes standard with 12 (⅙ size) 6 7/8"L x 6 ¼"W x 4"D (175 mm x 159 mm x 102 mm) clear polycarbonate food pans in countertop prep area.
- Countertop pan opening designed to fit varying size pan configurations with available pan divider bars. Varying size pans supplied by others.
- NSF/ANSI Standard 7 compliant for open food product.

ELECTRICAL
- Unit completely pre-wired at factory and ready for final connection to a 115/60/1 phase, 15 amp dedicated outlet. Cord and plug set included.



115/60/1
NEMA-5-15R

OPTIONAL FEATURES/ACCESSORIES
Upcharge and lead times may apply.
- ❑ Pan dividers
- ❑ Single overshelf
- ❑ Double overshelf

PLAN VIEW

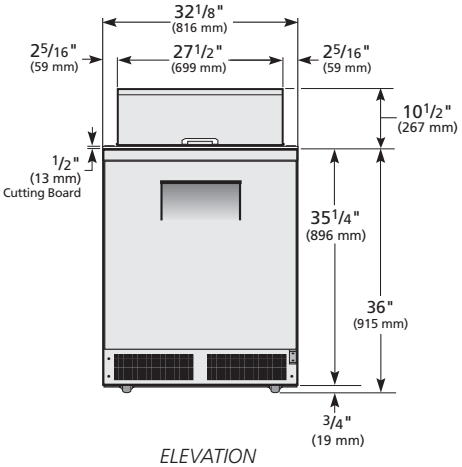

ELEVATION

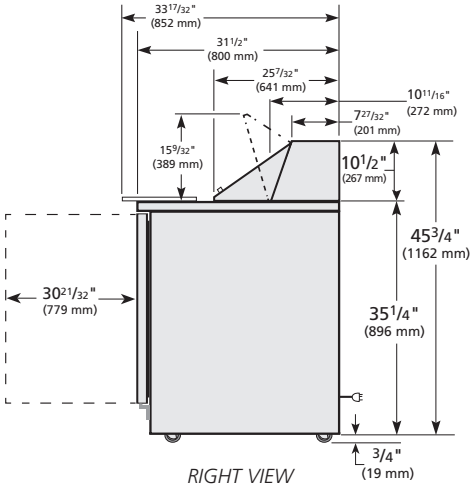

RIGHT VIEW

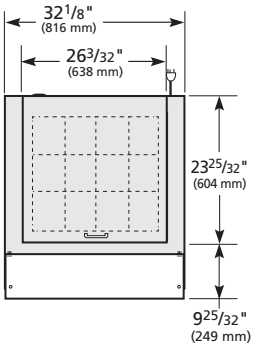

TOP VIEW WITH HOOD

METRIC DIMENSIONS ROUNDED UP TO THE NEAREST WHOLE MILLIMETER

SPECIFICATIONS SUBJECT TO CHANGE WITHOUT NOTICE

KCL	Model	Elevation	Right	Plan	3D	Back
	TFP-32-12M-HC					

TRUE MANUFACTURING CO., INC.
2001 East Terra Lane • O'Fallon, Missouri 63366-4434 • (636)240-2400 • Fax (636)272-2408 • Toll Free (800)325-6152 • Intl. Fax# (001)636-272-7546 • www.truemfg.com